JAKŠA SOLENOID VALVES

Type D223 G1/4 DN4.5

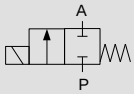

Brass body

Ports	Orifice Size [mm]	Flow coeficient kv [l/min]	Differential pressure [bar]		Material		Mass [kg]	Coil type	Model	Voltage	Power [W]	Order code
		water at 1 bar	min	max	body	seal						
G1/4	4.5	7.5	0	20	Brass	FPM	0.52	TM35	D223	230 V AC	16	320714
										115 V AC	16	320764
										24 V AC	16	320731
				25	Brass	FPM	0.52	TM35	D223	24 V DC	18	320740
										12 V DC	18	320751

Inox body

Ports	Orifice Size [mm]	Flow coeficient kv [l/min]	Differential pressure [bar]		Material		Mass [kg]	Coil type	Model	Voltage	Power [W]	Order code
		water at 1 bar	min	max	body	seal						
G1/4	4.5	7.5	0	20	INOX	FPM	0.52	TM35	D223N	230 V AC	16	320498
										115 V AC	16	320472
										24 V DC	12	320477
						EPDM	0.52	TM35	D223N	230 V AC	16	320475
				25	INOX	EPDM	0.52	TM35	D223N	24 V DC	18	320478

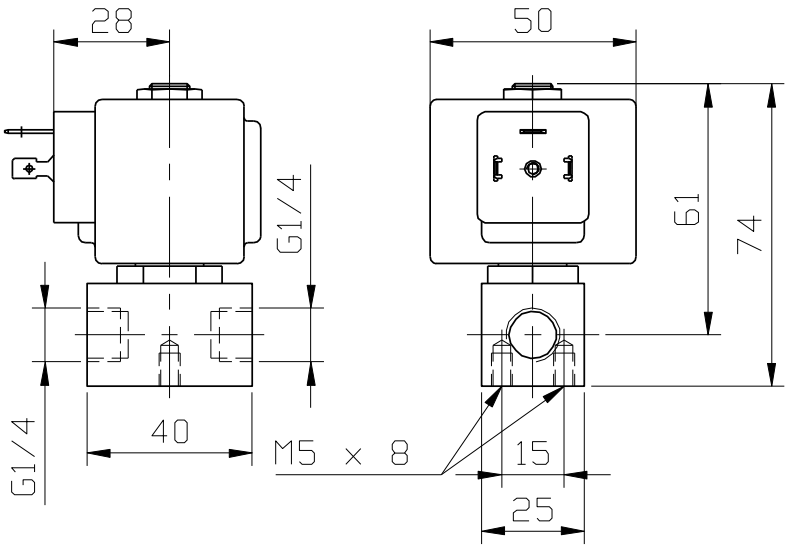

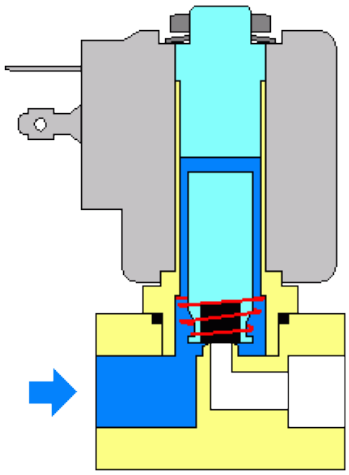

2019-06-07