WWW.GAS-AS.CZ

Model M2521 G3/4 DN18

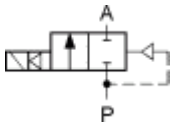

Ports	Orifice size [mm]	Flow coeficient Kv [l/min]	Differential pressure [bar]		Material		Mass [kg]	Coil type	Model	Voltage	Power [W]	Orde code
		water (p = 1 bar)	min	max	body	seal						
G3/4	18	65	0	10	brass	NBR	0.76	TM35	**M2521**	230/AC	8	**301701**
										115/AC	16	**301704**
										48/AC	16	**301745**
										24/AC	8	**301746**
										24/DC	12	**301705**
										12/DC	18	**301743**
						EPDM	0.76	TM35	**M2521**	230/AC	8	**301706**
										200/DC	10	**301708**
										24/AC	8	**301741**
										24/DC	12	**301742**
										12/DC	18	**301707**

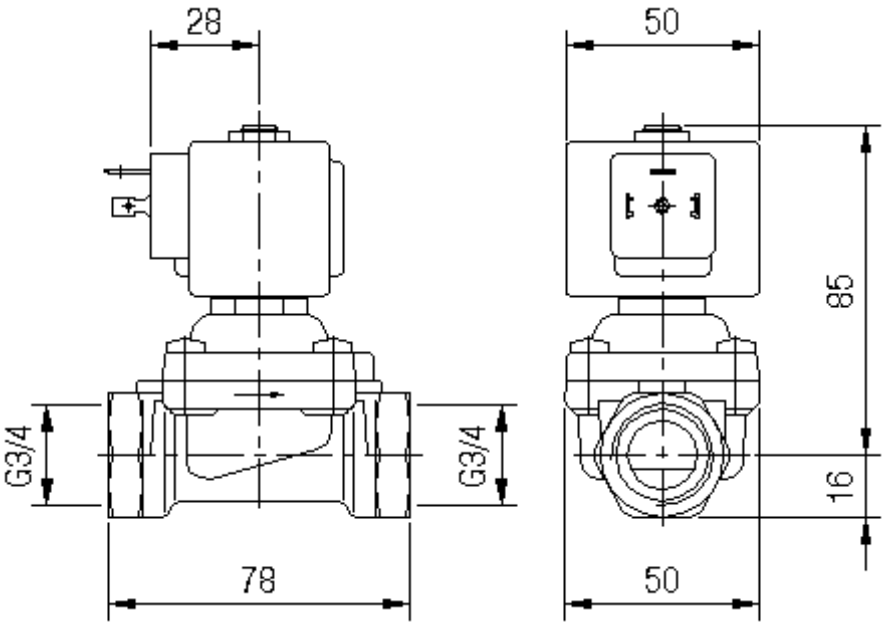

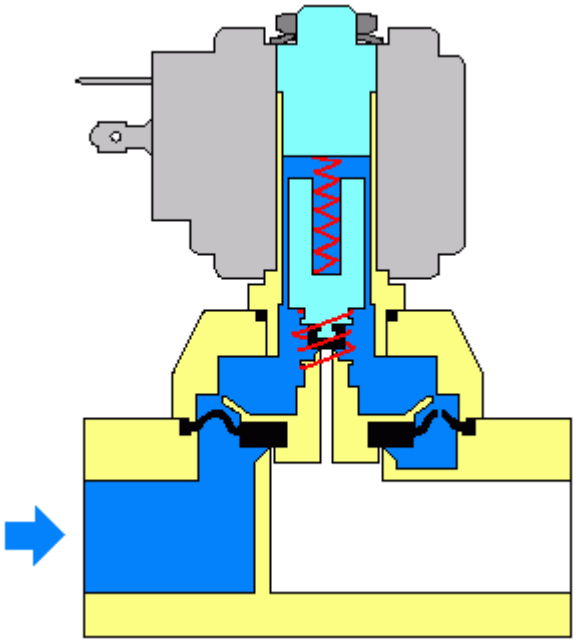

301701
JAKŠA