New deal
AUTOMATIC CONDENSATE DRAIN

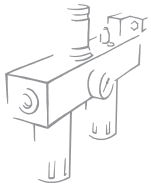

System supply condensate drain:
- All-round condensate level viewing
- Automatic drain from inside the bowl
- Axial coupling

TECHNICAL DATA

		SCAL ND 1/2''
Threaded port		G 1/2''
Maximum working temperature	°C	50
at 1 Mpa; 10 bar; 145 psi	°F	122
Maximum admissible pressure	MPa	1.3
	bar	13
	psi	188
Wall fixing screws		M6x75
Weight	[kg]	0.5

DIMENSIONS

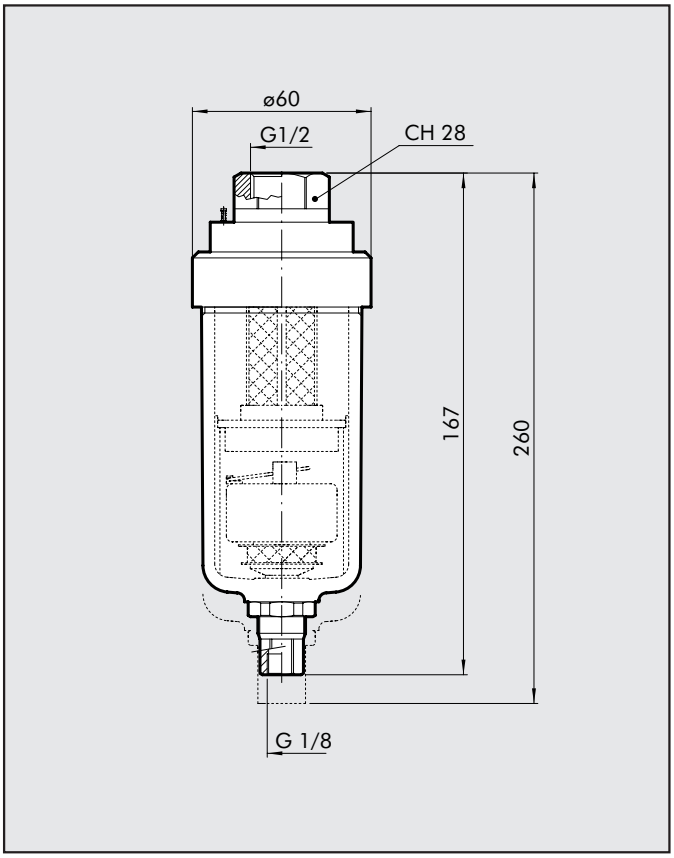

ORDERING CODES

Code	Description
4589003	ACC. SCARICATORE C.AUT. 1/2 IN LINEA

NOTES

3